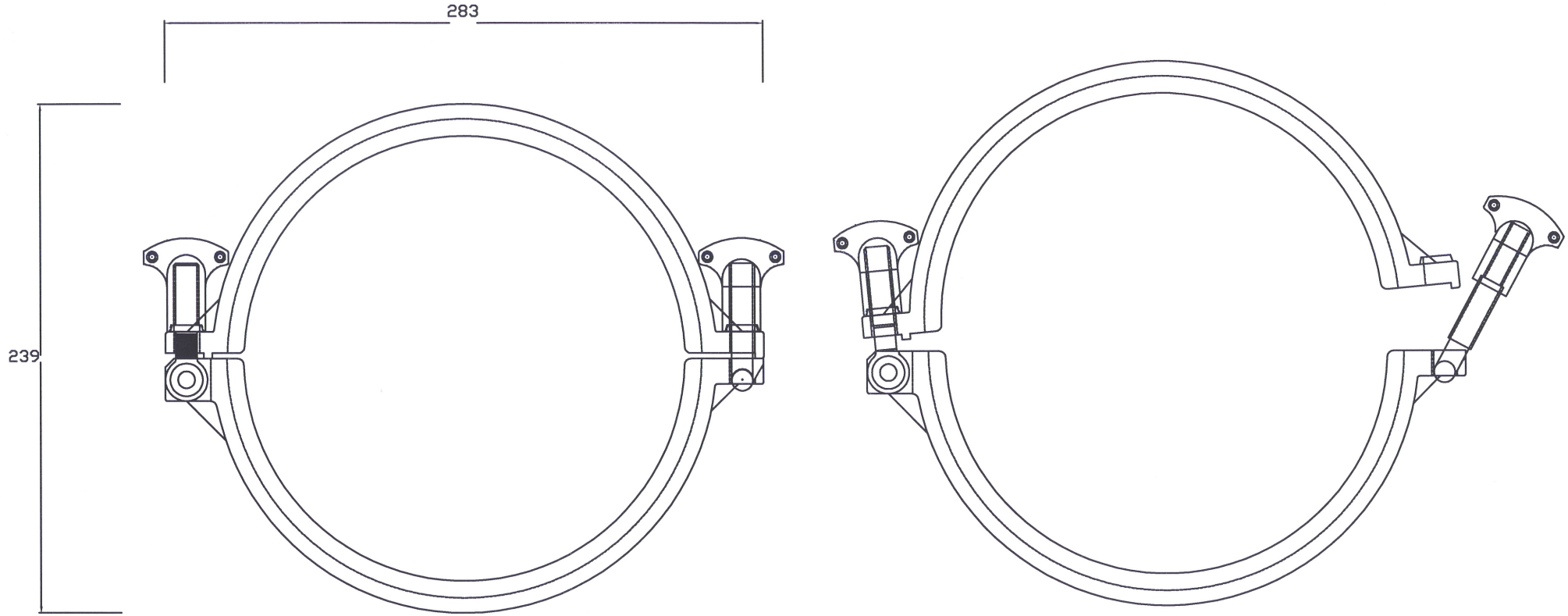

UK Patent No: GB2361753
UK Patent No: GB2362428
UK Patent App No. 0719972.2
USA Patent No: US 6,708,377,B2
USA Patent No: 10/026,215
India Patent No: 199286
Australian Patent No: 774546

Mod No.	ISSUE	DATE
	1	08.08.07

THIRD ANGLE PROJECTION
B.S. 308
DIMENSIONS IN MILLIMETERS
Unless Otherwise Stated

TOLERANCES UNLESS OTHERWISE STATED
WHOLE NO. ±
ANGULAR DIMS ±
1 DEC. PLACE ±
2 DEC. PLACE ±
DO NOT SCALE

MATERIAL AND SPECIFICATION
ZYTEL 70G30L
WHITE WT192

Bio-Pure Technology Ltd.
7 Falcon Court , Parklands Business Park, Denmead , Hants PO7 6BZ ENGLAND
Tel. 02392 499000 Fax. 02392 499001
Email. sales@biopuretech.com
Web. www.biopuretech.com

TITLE	BIO-CLAMP	
DRAWING NO.	NG800WH	
CUSTOMER		
DRAWN	CHECKED	APPROVED
PWH	RM	RM